Mytribos Symposium 2 (2017) pp.4-7

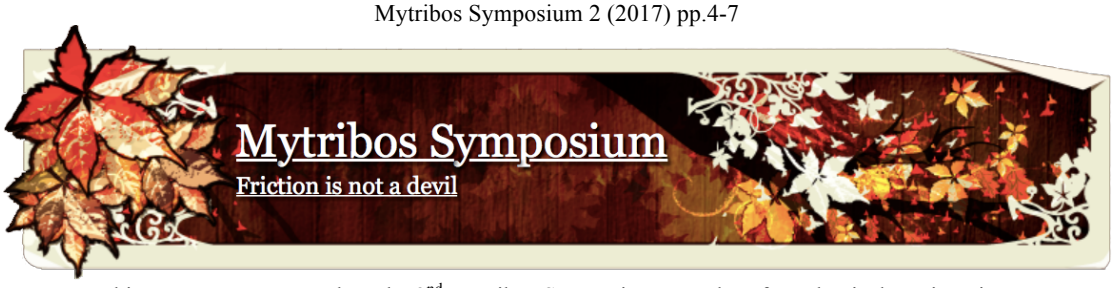

This paper was presented at The 2nd Mytribos Symposium, Faculty of Mechanical Engineering, Universiti Teknologi Malaysia, Skudai, Johor on 8th October 2017

Quality in Tribology

Ramdziah Md .Nasir [1,2*], Abdul Yamin Saad [2]
[1] School of Mechanical Engineering, Engineering Campus Universiti Sains Malaysia, 14300 Nibong Tebal, Pulau Pinang, Malaysia.
[2] Nanofabrication and Functional Materials Group, SoME USM, 14300 Nibong Tebal, Pulau Pinang.

KEYWORDS
Quality
Tribology
Nanotribology
Sustainability

ABSTRACT
Quality in tribology related to sustainability and life service of the product or component of system. Hence, it is inevitable for quality to become the meaning to life by projecting to the five elements of quality house i.e. in the prospect of utilizing resources, environment, economics, technology and society (REETS). Therefore, this paper will focus on reviewing these elemental relationships towards quality and enhancement of quality in tribology.

1. Introduction

Industry 4.0 focused on the sustainability, safety, renewable, economical and community issues towards quality life. In quality house, as according to Malaysia 2020 Strategy – the vision for the 21st century, Malaysia must provide alternatives to the critical communal uproar, one of which are further reduction of energy-material-losses and drastically improving the environmental protection by taking the challenge for sustainability as part of the overall management objective.

Green tribology in industrial 4.0 is the grand opportunity to meet the extreme requirements of the present century [1]. An essential part of green quality is the Quality of Life (QoL). Scientists offered various alternative approaches to defining and measuring quality of life and the indicators that reflect it, e.g. social indicators such as health, subjective well-being measures, economic indices, etc. as in a methodologically and conceptually complementary [2] with some weaknesses, complexity, multifaceted construct that requires multiple interdisciplinary approaches from different angles. In fact, good life arises from a variety complex way either multi-criteria, multi-characteristic and multi-channel based on IOT approach for assessment of the sustainable complex systems existed [3-5]. In this paper, the focus will be on the environmental quality of life, regarding the safety and sustainability of tribo-systems resulting of their contact with the media where they are found. However, quantitative evaluations of those parameters are still in seed. Most of the experimental work is done based on micro- and nano-scale tribology and following standard ISO 17025 and ASTM D4172-94 (Approved 2010) while the procedures following manual and standard ASTM G99.

2. Experimental procedure

Some of the works related to industry such as railing and conveyor belt having challenges in having smooth motion whereby after cyclic movement with certain loading has been applied, the railing and conveyor belts started to wear off and produce jerky and noisy runs. This has been a nuisance to industry related to logistic especially in container movement in port. Hence, one of the studies involved the fabrication of materials that suits the railing and also the conveyor belting as shown in Figure 1.

In short, the author managed to determine the min value of friction needed to ensure the smoothness of the motion in the rail line by re-constructed the design and also by scrutinizing the appropriate materials to be used for the belting. However, due to secretive policy, the value is not permitted to be published by the firm.

* Corresponding author:
ramdziahnasir@gmail.com,
ramdziah@usm.my

In recent work, the authors also study the corrosion inhibition in magnetic hard disk media. The effect of carbon active coating in nano-scale for HRD whereby the diamond-like COC was to perform on the CD within 2 nm of several layers of Si-C-coated disc. In this work, the performance of the HRD was benchmarked with the available in the market player. Hence, the work has been successfully completed and several batches have been made available in the market for X (M) Sdn. Bhd. as shown in Figure 2.

Under collaboration with inter-school in USM, our tribology laboratory is well known to be attached to Nano-Fabrication and Functional Materials (NFM) and i-NOR (USM Physic School Lab). From this smart collaboration, many projects based for short services (UTHM, UTEM, UIA) and short-term projects (PPRN and FRGS) have been initiated.

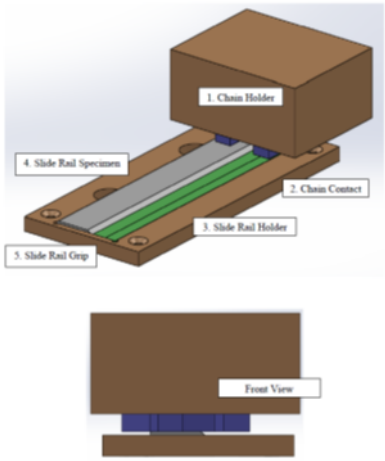

Figure 1: An overview of railing and re-construction of conveyor belt for FMSB.

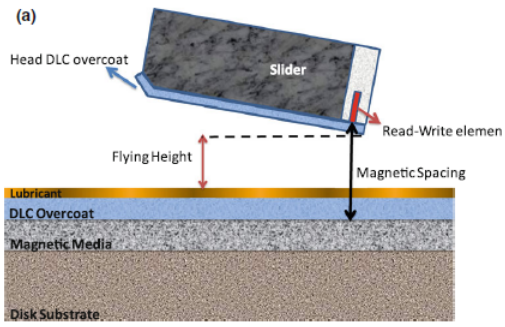

Figure 2: A schematic of the head–disk interface showing the different nano-layers of the magnetic media disk (Flying height 7-10 nm, Magnetic spacing: 10-12 nm, θ:15-20 degree).

Anyhow, the bigger scale of the project on bio-implant tribology study which has been successfully completed (with 2 PhD students from School of Material, Resources and Mineral, USM). The finding on mechanical and tribological properties of UHMWPE composites for implant application has been published in many ISI publications internationally [1]. Refer Figure 3 for the UHMWPE fabricated and tested.

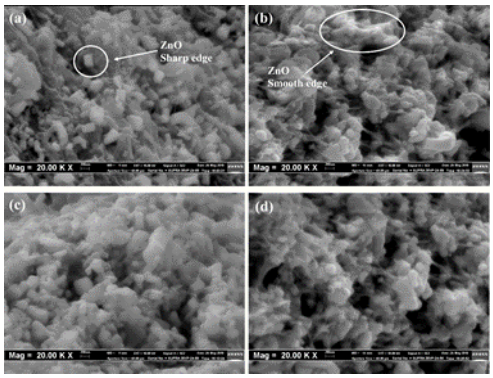

Figure 3: SEM micrographs of the tensile fracture surfaces of UHMWPE based composites: (a) 10 wt% U-ZPE, (b) 10 wt% T-ZPE, (c) 20 wt% U-ZPE and (d) 20 wt% T-ZPE.

For tribology behavior of hBN particles in modified jatropha oil for sustainable metalworking fluids, work is done with collaboration under UTHM and published in a high impact journal. The four ball tester was subjected to certain parameters and compared as illustrated in Figure 4 and Figure 5.

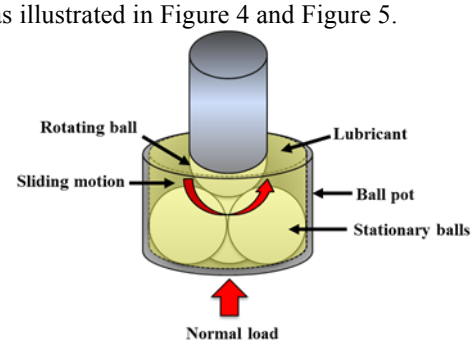

Figure 4: Schematic diagram of the four-ball tester.

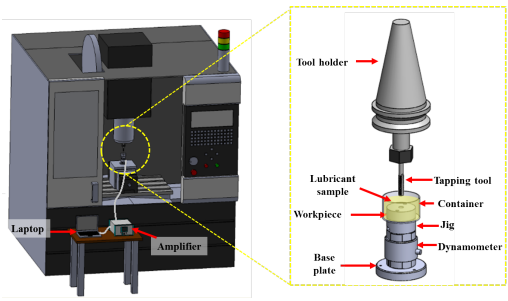

Figure 5: Schematic diagram of tapping torque set-up.

One of the industrial related works is on vision based measuring technique for quality control works with non-contact measuring method. The improvement on this work has been recognized and lean implementation has been done to conduct the technique in industry near Penang. Quality control is an important element in manufacturing industry to ensure high quality products are produced in order to meet customer needs and requirement. The project involves the transfer of knowledge related to quality improvement in one of the semiconductor company in Malaysia.
Steps taken:

a) Identify pattern of major tribo-defect

Figure 6: Tearing at panel-edge for part.

b) Analysis tearing at panel-edge

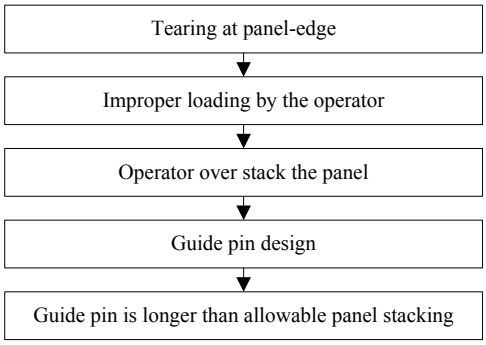

Figure 7: 5-Why analysis for tearing at panel-edge.

This technique could ease the way forward in corrective and preventive actions (CAPA) method of conducting research especially related to high demand and low duration impact research. The work is awarded from Knowledge Transfer Programme form KTP.

Wear behaviour of TIC coated low alloy steel at 600 ^{o}C has been carried out in an effort to materialized the hard surface coating and work has been published as illustrated in Figure 8 whereby improvement on coated surface morphology has been presented in Figure 9.

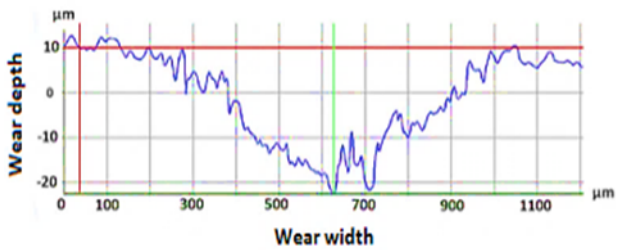

(a)

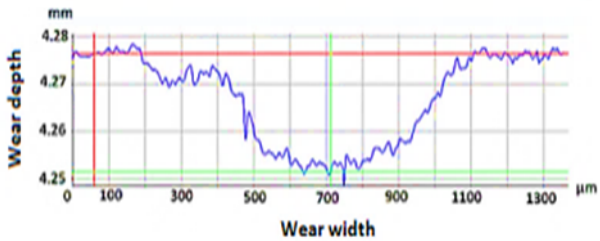

(b)

Figure 8: Wear profile of the (a) uncoated and (b) coated.

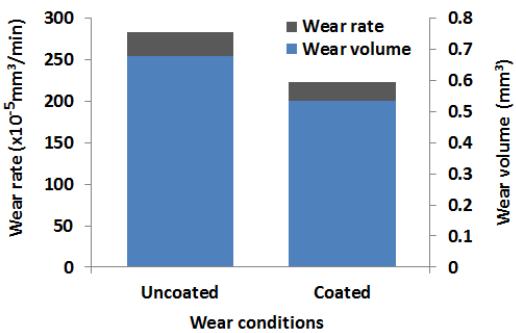

(a)

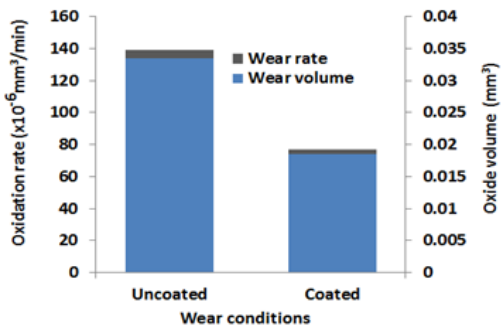

(b)

Figure 9: The rate of (a) wear loss and (b) surface oxidation for the uncoated and coated samples.

Currently, the author is working on the tribological study on recycle carbon with Nuclear Malaysia, CTRM, UTEM and USM for the conservation of environment especially related to aerospace industry and to retrieve the survival of the small and medium enterprise (SME). Results and discussion is available from [1].

3. Conclusion

As a conclusion, the publications related to all the said works can be reached from the author [1]. Hence, for all young tribologists in this colloquium, the author would like to encourage all to work for the humanity, touch as many people along the way to succeed and don't forget to contribute back to the community.

Acknowledgement

Acknowledgement is accorded to NFM &i-NOR labs, SoME, USM, UTHM, FMSB, FRGS, PPRN, PRGS and KTP.

Reference

[1] Khoo, W. S., Nasir, R. M., Zaidi, M. R., & Ng, W. L. (2015, November). Diamond like carbon deposition process optimization for media disk corrosion performance. In Proceedings of Malaysian International Tribology Conference 2015 (Vol. 2015, pp. 255-256). Malaysian Tribology Society.

[2] Chang, B. P., Akil, H. M., Affendy, M. G., Khan, A., & Nasir, R. B. M. (2014). Comparative study of wear performance of particulate and fiber-reinforced nano-ZnO/ultra-high molecular weight polyethylene hybrid composites using response surface methodology. Materials & Design, 63, 805-819.

[3] Talib, N., Nasir, R. M., & Rahim, E. A. (2017). Tribological behaviour of modified jatropha oil by mixing hexagonal boron nitride nanoparticles as a bio-based lubricant for machining processes. Journal of Cleaner Production, 147, 360-378.

[4] Elmi A. B, Nurul A. H, Nurul. S. A. S., Ramdziah M. N., Vision Based Measuring Technique for Quality Control Works with Non-Contact Measuring Method. International Conference on Knowledge Transfer 2015. USM-KPT.

[5] Md Idriss, A. N., Maleque, M. A., Yaacob, I. I., Nasir, R. M., Mridha, S., & Baker, T. N. (2017). Wear behaviour at 600° C of surface engineered low-alloy steel containing TiC particles. Materials Science and Technology, 1-8.